SOLID ePIT

Solar carports

For people who value **modern design** and **top quality**.

Energy-generating, uniquely designed, ecological carport for private homeowners and business.

SOLITEK

ePIT

CONTACTS:

info@solitek.eu
www.solitek.eu

info@epit.lt
www.epit.lt

CERTIFICATES:

This datasheet is not legally binding. The manufacturer reserves the right to make changes to product specifications and/or product features without prior notice.

Construction parameters:

	SOLID ePIT-1	SOLID ePIT-2
Parking places	1 auto	2 autos
Dimensions	6827 x 4204 mm	6827 x 8352 mm
Construction material	Glued wood - Glulam GL24h	
Painting technology	Industrial painting according service class EN355:2013	
Roof insulation type	Silicone; aluminum profiles	
Roof angle	3°	
Wind load	32m/s	
Snow load	5,5 kPa	
Color	RAL9016 (traffic white); RAL7015 (slate grey)*	
Water drainage	Included	
LED lightning	Integrated (6 LED, 1 meter each)	
PV cabling	Integrated	
Construction warranty	10 years for construction / 2 years for painting	

*other colors are available on request

PV system parameters:

	SOLID ePIT-1	SOLID ePIT-2
Solar installation power	5,12 kW	10,24 kW
PV module quantity	16 pcs	32 pcs
PV module type	SOLID Bifacial B.60 320W	
PV module warranty	30 years for product/ 30 years at 87% efficiency	
PV module features	· Glass-glass technology · Bifacial cells (both sides working) · Tempered safety glass · Salt-mist and ammonia resistance · Fire class A · Self-cleaning effect	
Inverter	Huawei 5 kW	Huawei 10 kW
Inverter cables	Integrated	
Inverter warranty	5 years	

Carport drawings:

SOLID EPIT-1 front view

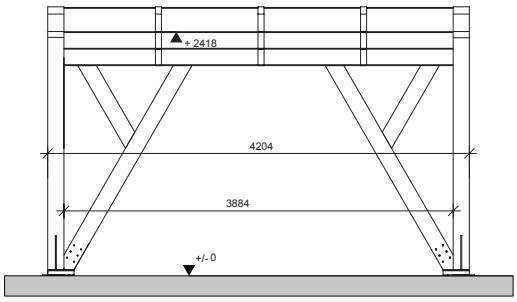

SOLID EPIT-2 front view

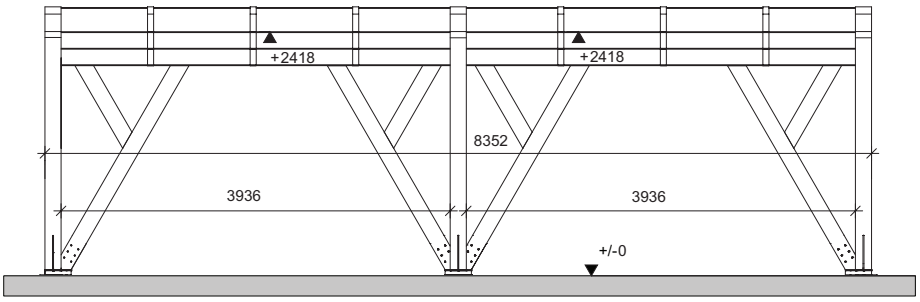

SOLID EPIT-1/SOLID EPIT-2 side view

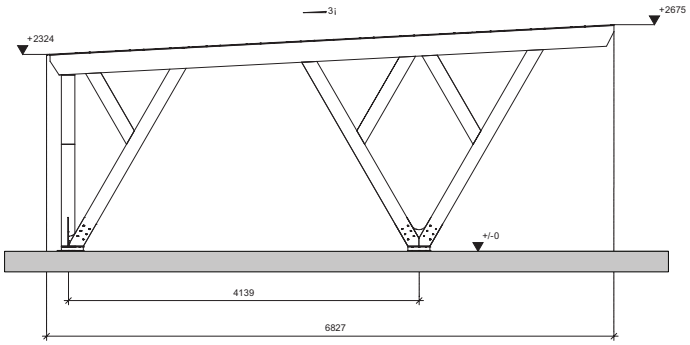

This datasheet is not legally binding. The manufacturer reserves the right to make changes to product specifications and/or product features without prior notice.